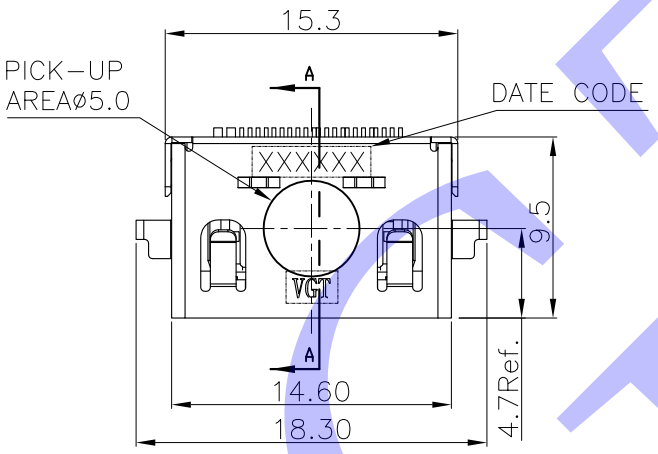


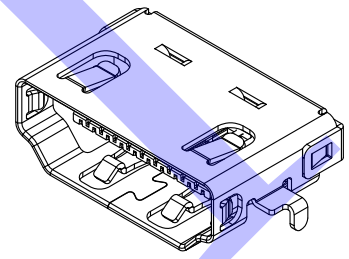

PART NUMBER : JCN-H2AG

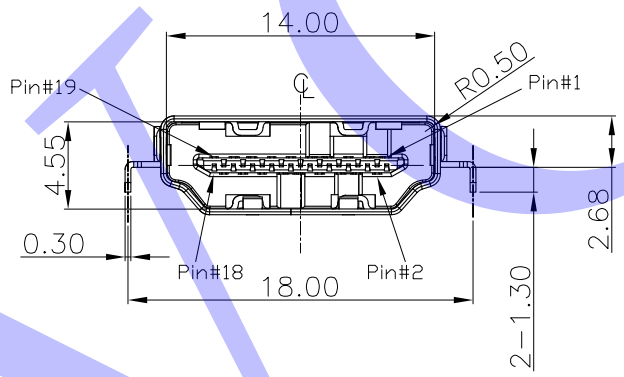


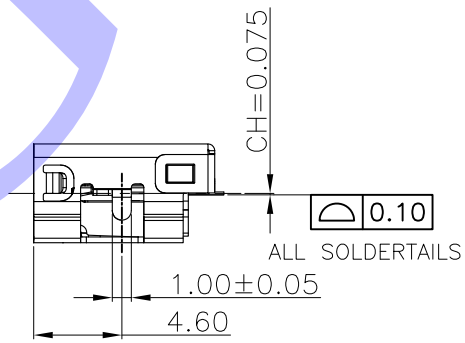


| | | | |
|---|---|---|---|
| △X0 | NEW_DESIGN | LEON | 040620 |
| MARK | REVISION RECORD | DRAWN | MMDDYY' |

CHECKED: Leon
APPROVED: Xavier
REV.: X1

UNLESS OTHERWISE SPECIFIED TOLERANCE

| Dimension Range | Tolerance |
|---|---|
| X.X | ±0.35 |
| X.XX | ±0.25 |
| X.XXX | ±0.15 |
| ANGLE | ±5° |

NAME: HDMI A 2.0,1 Row SMT,Offset 0.075mm,Dip Shell,Receptacle

SCALE: NA
UNIT: mm
SIZE: A4
SHEET: 1/2

Material/Plated/Notes
Ⓐ SHIELD : STAINLESS STEEL/NICKEL PLATING
Ⓑ HOUSING : HIGH TEMPERTURE PLASTIC
© CONTACTS : COPPER ALLOY/NICKEL UNDERPLATED OVERALL,LEAD FREE TIN ALLOY AT TERMINATION.

PART NO.: JCN-H2AG
DOC. NO.: JCN-H2AG

HF RoHS
THIS IS A RoHS COMPLIANT COMPONENT/ PRODUCT.

V-GENERAL TECHNOLOGY
維將科技股份有限公司

Design drawing